Airedale
APPLIED THERMAL INNOVATION

Dry coolers

DR10-DR95

TECHNICAL MANUAL

CE

bsi. ISO 9001 Quality Management FM00542

ISO 14001 Environmental Management EMS52086

Customer Services

Warranty, Commissioning & Maintenance

As standard, Airedale guarantees all non consumable parts only for a period of 12 months, variations tailored to suit product and application are also available; please contact Airedale for full terms and details.

To further protect your investment in Airedale products, Airedale can provide full commissioning services, comprehensive maintenance packages and service cover 24 hours a day, 365 days a year (UK mainland). For a free quotation contact Airedale or your local Sales Engineer.

All Airedale products are designed in accordance with EU Directives regarding prevention of build up of water, associated with the risk of contaminants such as legionella.

For effective prevention of such risk it is necessary that the equipment is maintained in accordance with Airedale recommendations.

In addition to commissioning, a 24 hour, 7 days a week on-call service is available throughout the year to UK mainland sites. This service will enable customers to contact a duty engineer outside normal working hours and receive assistance over the telephone. The duty engineer can, if necessary, attend site, usually within 24 hours or less. Full details will be forwarded on acceptance of the maintenance agreement.

CAUTION

Warranty cover is not a substitute for maintenance. Warranty cover is conditional to maintenance being carried out in accordance with the recommendations provided during the warranty period. Failure to have the maintenance procedures carried out will invalidate the warranty and any liabilities by Airedale International Air Conditioning Ltd.

Spares

A spares list for 1, 3 and 5 years will be supplied with every unit and is also available from our Spares department on request.

Training

As well as our comprehensive range of products, Airedale offers a modular range of Refrigeration and Air Conditioning Training courses, for further information please contact Airedale.

Customer Services

For further assistance, please e-mail: enquiries@airedale.com or telephone:

UK Sales Enquiries	+ 44 (0) 113 239 1000	enquiries@airedale.com
International Enquiries	+ 44 (0) 113 239 1000	enquiries@airedale.com
Spares Hot Line	+ 44 (0) 113 238 7878	spares@airedale.com
Airedale Service	+ 44 (0) 113 239 1000	service@airedale.com
Technical Support	+ 44 (0) 113 239 1000	tech.support@airedale.com
Training Enquiries	+ 44 (0) 113 239 1000	marketing@airedale.com

For information, visit us at our web site: www.airedale.com

Airedale Ltd endeavours to ensure that the information in this document is correct and fairly stated, but none of the statements are to be relied upon as a statement or representation of fact. Airedale Ltd does not accept liability for any error or omission, or for any reliance placed on the information contained in this document. The development of Airedale products and services is continuous and the information in this document may not be up to date. It is important to check the current position with Airedale Ltd at the address stated. This document is not part of a contract or licence unless expressly agreed. No part of this document may be reproduced or transmitted in any form or by any means, electronic or mechanical, including photocopying, recording, or information storage and retrieval systems, for any purpose other than the purchaser's personal use, without the express written permission of Airedale Ltd.
©2015 Airedale International Air Conditioning Limited. All rights reserved. Printed in the UK.

Contents

General Specification **4**
- Unit Identification 4
- Standard Features 5
- Electrical 5
- Optional Extras - Energy Saving 6
- Optional Extras – General 6

Installation data **7**
- Case Sizes 7
- Ambient Temperature Sensor Location 8

Dimensions/Weights/Positioning **11**
- Horizontal case size 1 and 2 (1 fan) 12
- Vertical case size 1 and 2 (1 fan) 13
- Horizontal case size 3 (2 Fans) 14
- Vertical case size 3 (2 Fans) 14
- Horizontal case size 4 (3 Fans) 15
- Vertical case size 4 (3 fans) 16
- Vertical case size 5 (4 fans) 18

Unit Lifting **19**

Operating Limits **20**

Performance Data – Dry Coolers **20**
- Standard Dry Cooler Fan 20

Sound Data **22**
- Horizontal 23
- Vertical 24

Mechanical Data **25**

Waterside Pressure Drop **29**

Electrical Data **30**

Notes **33**

General Specification

Unit Identification

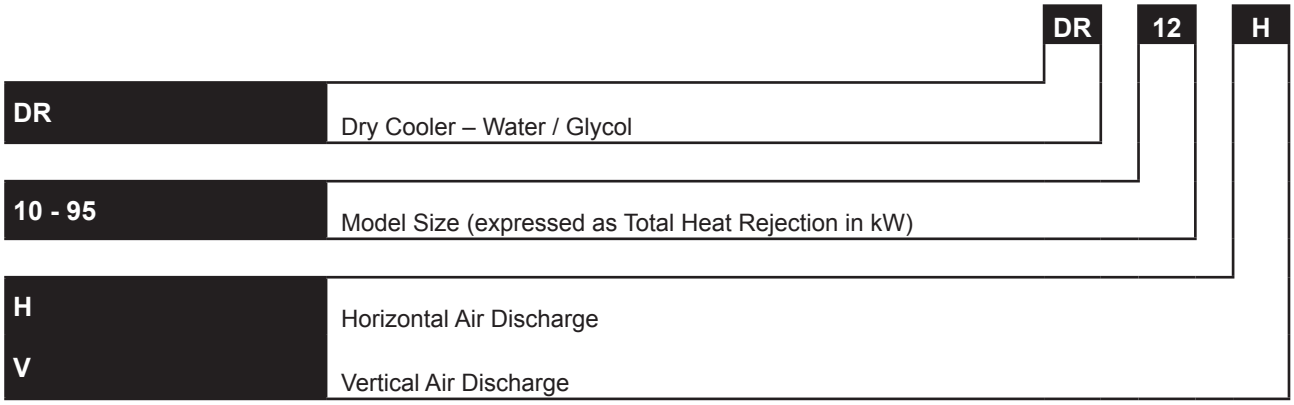

Introduction

This range comprises of 14 air cooled dry cooler models with total heat rejection 10 – 95 kW

Custom designed for a small footprint, low sound level, slimline and aesthetically pleasing appearance.

Available in either horizontal or vertical air discharge orientation, ***please specify at order***.

All units are dispatched following extensive leak and pressure testing and carry a holding charge of inert gas.

CE Directive

Airedale certify that the equipment detailed in this manual conforms with the following EC Directives:

Electromagnetic Compatibility Directive (EMC)	2004/108/EC
Low Voltage Directive (LVD)	2006/95/EC
Machinery Directive (MD)	89/392/EEC in the version 2006/42/EC
Pressure Equipment Directive (PED)	97/23/EC

To comply with these directives appropriate national & harmonised standards have been applied. These are listed on the Declaration of Conformity, supplied with each product.

Maximum and Minimum Operation Temperature (TS) and Pressure (PS)

Operating Temperature (TS),	TS =	Min -20°C to Max 120°C *
Maximum Operating Pressure (PS)	PS =	High Side 10 Barg

*Based upon the maximum machine running temperatures.

Standard Features

Construction

Unit cabinets shall be manufactured from galvanised sheet steel coated with epoxy baked powder paint to provide a durable finish.

Standard unit colour shall be Light Grey (RAL 7035).

Dual position fixing legs shall be supplied attached to the unit via captive bolts and shake proof washers.

Horizontal Air Discharge

As standard, unit legs are attached and delivered in the horizontal air discharge mode as are the isolator and fan speed controller.

The legs attached to the top of the unit are for lifting and stacking and shall be removed and stored safely if not required.

IMPORTANT Only 2 units may be stacked together.

Vertical Air Discharge

As standard, unit legs shall be attached and delivered in the horizontal air discharge mode and shall be repositioned on site to offer vertical air discharge mode, refer to ***Dimensions / Weights / Positioning***, for details.

IMPORTANT To ensure the unit isolator and fan speed controller are in the correct orientation for vertical air discharge please specify at order.

Fan & Motor Assembly

All Models

The external rotor AC motor shall allow the use of a low power output, single phase, and speed controllable motor to power the fan.

The motor shall have inbuilt thermal overload protection and the assembly shall be supplied complete with a finger guard for protection.

Shall be available in either horizontal or vertical air discharge orientation, ***please specify at order***.

Electrical

All electrical components shall be rated for all year round outdoor use.

All wiring shall be colour coded and numbered for identification. All units shall be wired in accordance with current local and European standards.

Main Electric Isolator

A weatherproof mains isolator shall be fitted to ensure complete unit isolation of the electrical panel during adjustment and maintenance.

Optional Extras - Energy Saving

Electronically Commutated (EC) Fan Motor	Shall incorporate external EC rotor motor technology to provide highly accurate discreet speed control. The fans offer maximum air flow performance while keeping sound levels to a minimum. Each fan shall incorporate electronically commutated DC motor control using semi-conductor modules responding to a signal from the Airedale indoor unit. EC motors are DC motors with integrated AC to DC conversion; this gives the flexibility of connecting to AC mains with the efficiency and simple speed control of a DC motor. The EC fan shall offer significant power reduction in comparison with equivalent AC fan at both full and modulated fan speeds. The inbuilt EC fan control module shall allow for fan speed modulation from 0-100%, the modulating range of a standard AC fan is typically 40-100% of full fan speed.

Optional Extras – General

Short Case Axial Fans (SCAF)	Short case axial fans shall be supplied for indoor installations where discharge air requires to be ducted to an outdoor location. The fans shall meet duty plus nominal 75Pa of external static pressure.
Corrosion Resistant Coated Coils	For aggressive atmospheres a corrosion resistant coating shall be applied to the aluminium fins.
Shut Off Valves	Where unit isolation for easier maintenance is required, shut off valves shall be supplied loose for on site fitment.
Coil Guards	Protective mesh guards can be fitted to each of the outer coils to protect against damage.

Installation data
Case Sizes

The range of condensers and dry coolers are grouped together for easier identification.
Case sizes 1-5 (16 Condensers, 14 Dry coolers)

Outdoor Unit			
CR12H-0	A	DR10H-0	
CR16H-0		DR12H-0	B
CR22H-0		DR15H-0	
CR26H-0	B	DR20H-0	
CR30H-0		DR25H-0	
CR35H-0		DR30H-0	C
CR50H-0		DR35H-0	
CR60H-0	C	DR45H-0	
CR65H-0		DR40H-0	
CR75H-0		DR50H-0	D
CR80H-0		DR55H-0	
CR95H-0	D	DR75H-0	
CR105H-0		DR70H-0	E
CR130H-0		DR95H-0	
CR140H-0	E	-	
CR165H-0		-	

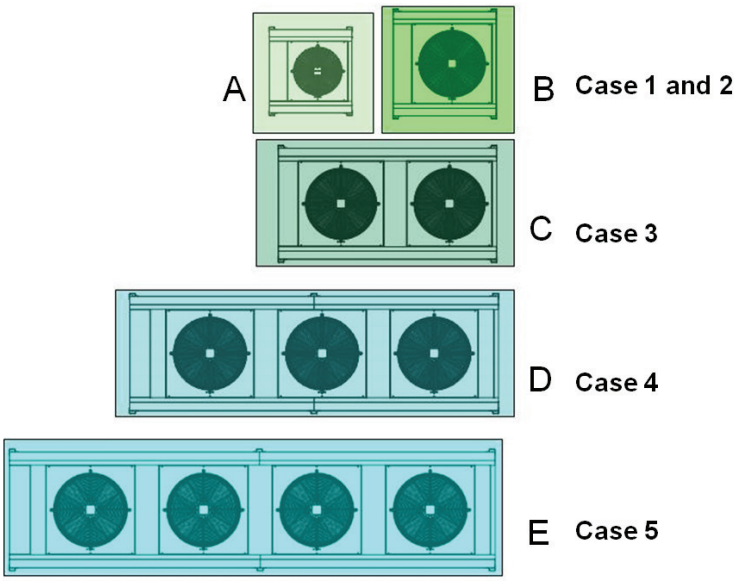

Ambient Temperature Sensor Location

Horizontal Airflow

In the case of a unit with a horizontal airflow specified, the location shown in figure 1 will be the final position of the ambient temperature sensor, fitted in house before shipment.

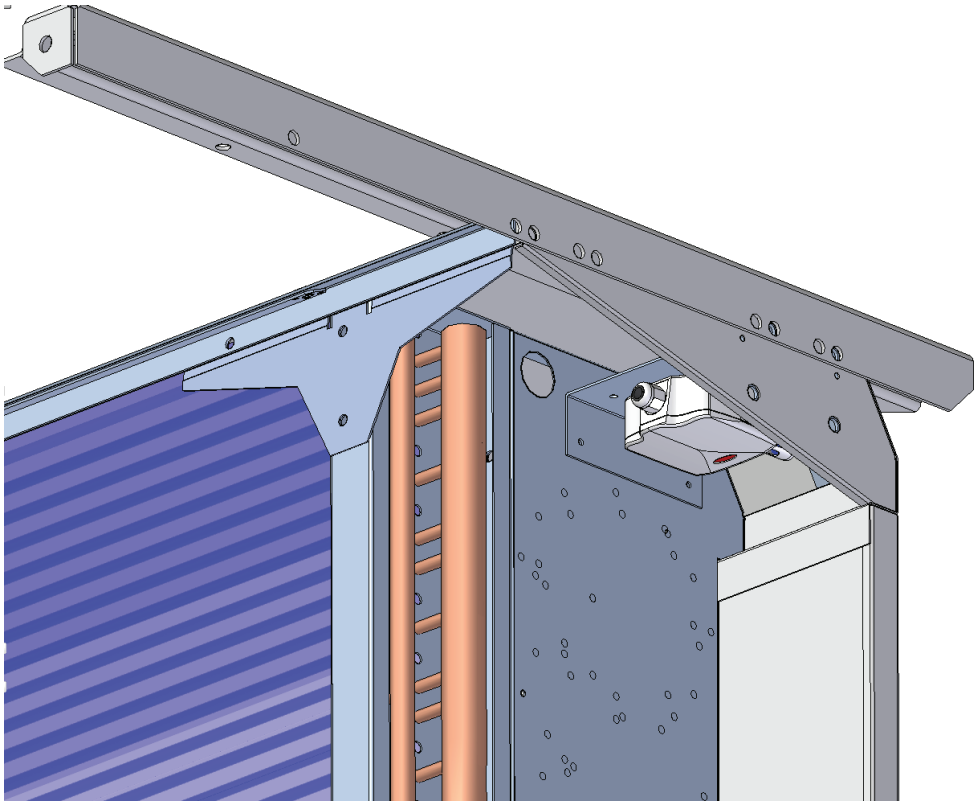

Figure 1: Ambient Sensor Location

Vertical Airflow

For units selected with a vertical airflow, the ambient temperature sensor should be mounted where shown in figure 1. This will be for transport purposes only. Once the unit has been installed the bracket is to be removed from this location and fastened to the bracket attached to the coil, shown in figures 3-5.

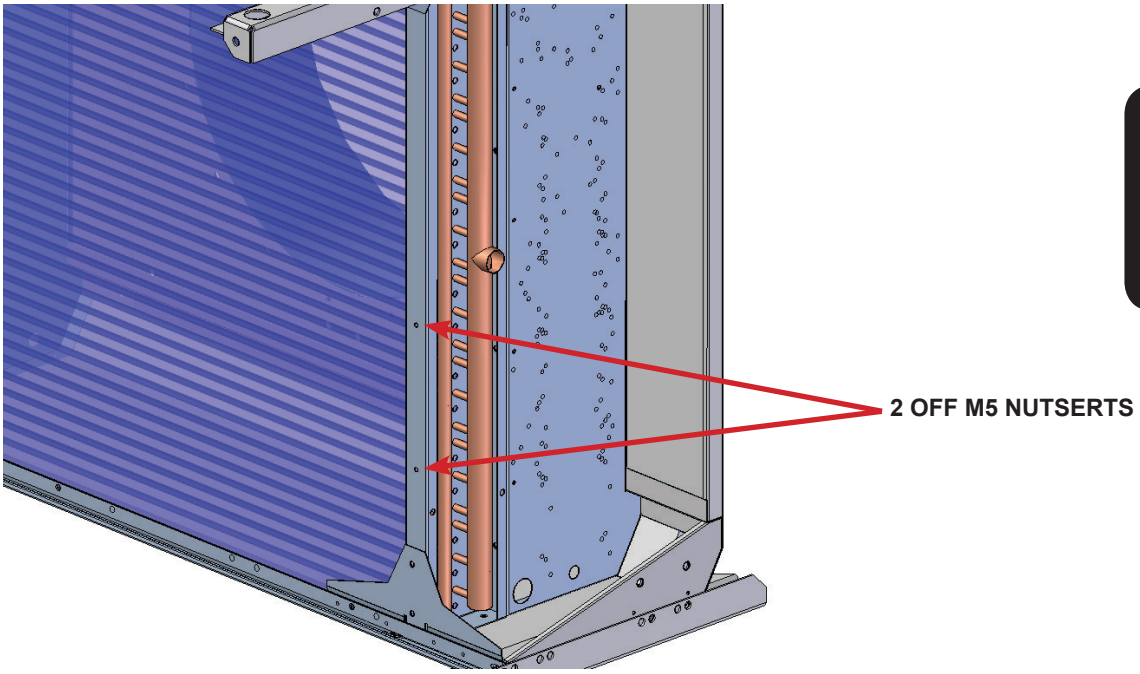

Figure 2: Sensor Mounting Location

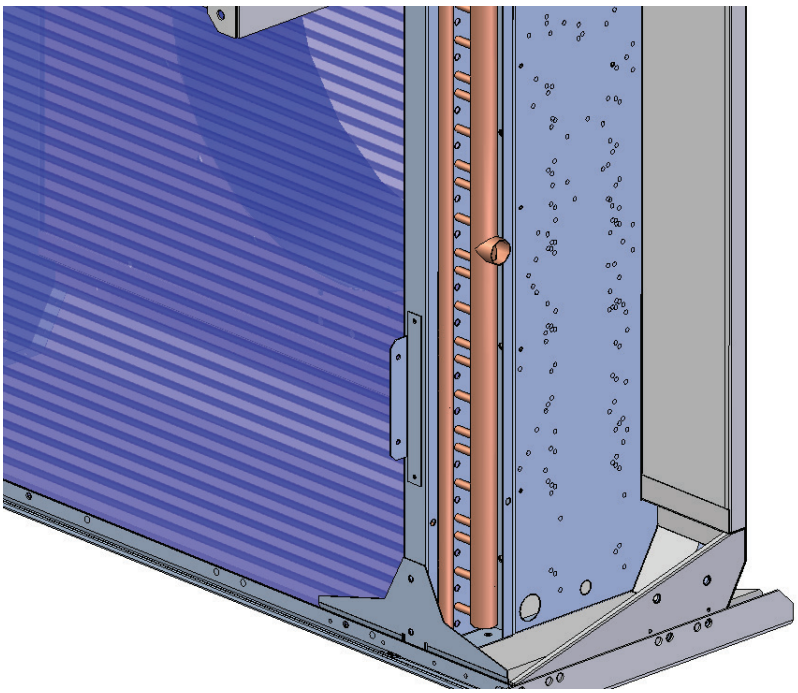

Figure 3: New Sensor Bracket

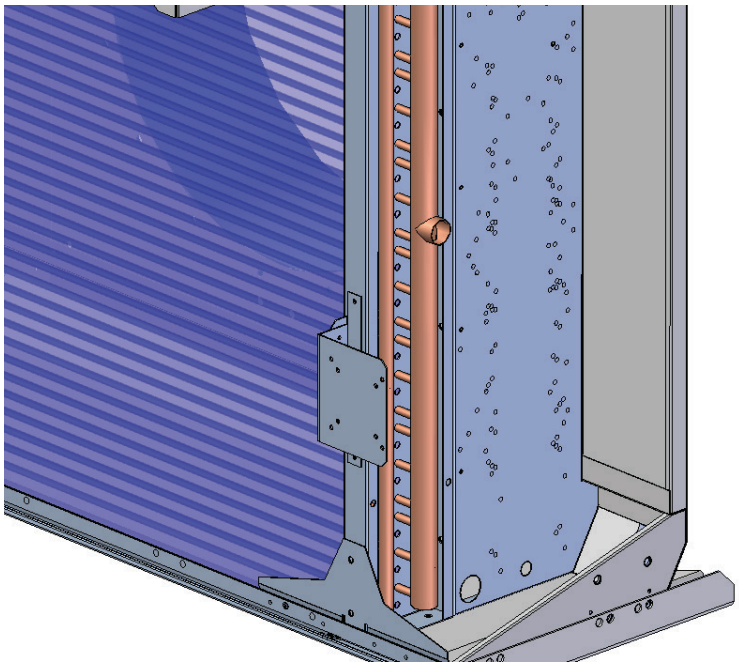

Figure 4: Existing Bracket Mounting Position

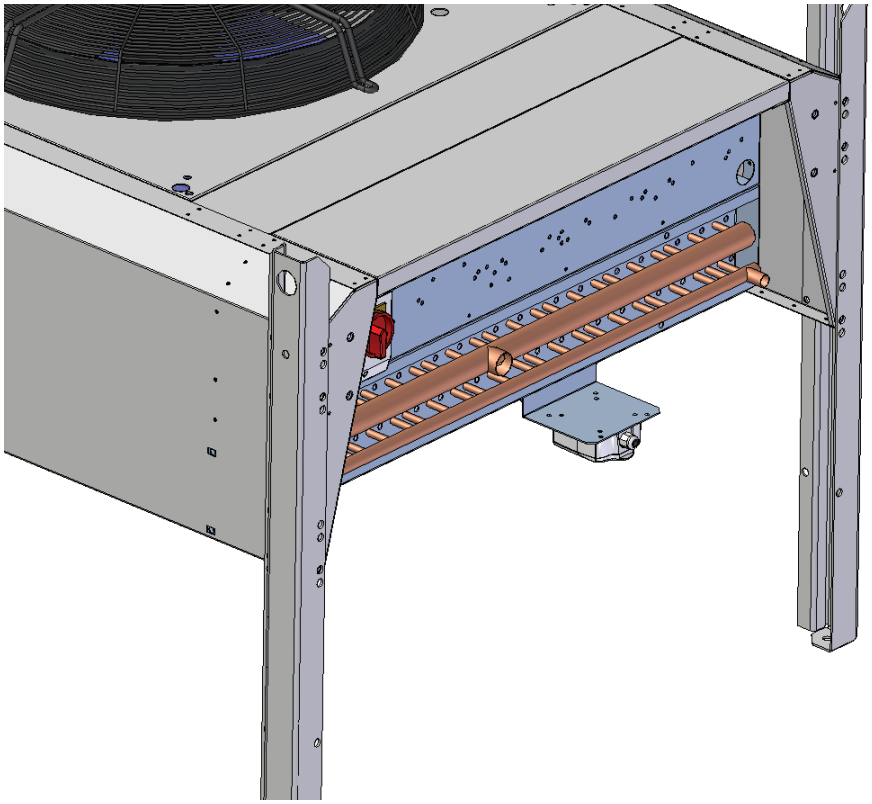

Figure 5: Sensor Location Overview

Dimensions/Weights/Positioning

IMPORTANT Unit diagrams can be supplied on request.
The following illustrations show the unit following fixing leg re-orientation, instructions are provided for this at delivery.

IMPORTANT The legs attached to the top of the unit are for lifting and stacking and may be removed and stored safely if not required.

Stacking units

Only 2 units may be stacked together. In addition to the standard minimum clearances around the unit further space is required.

Positioning dry coolers on top of each other can cause the bottom unit to be starved of air.

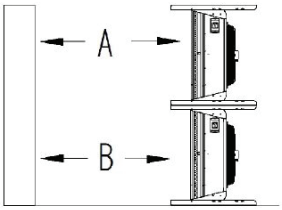

A= 1.5m (Two stacked units)
B= 0.5m (For single unit)

Horizontal case size 1 and 2 (1 fan)

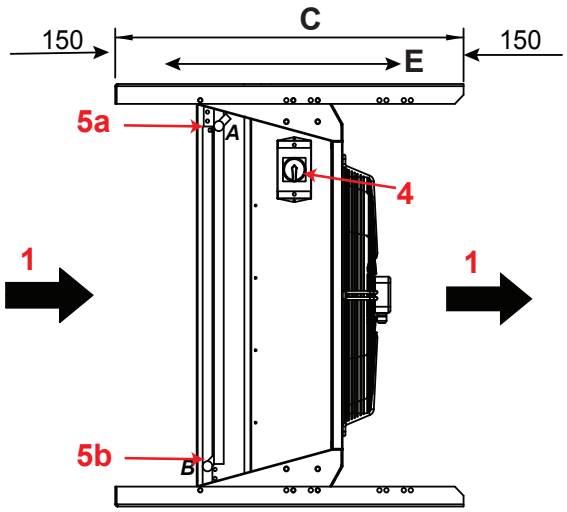

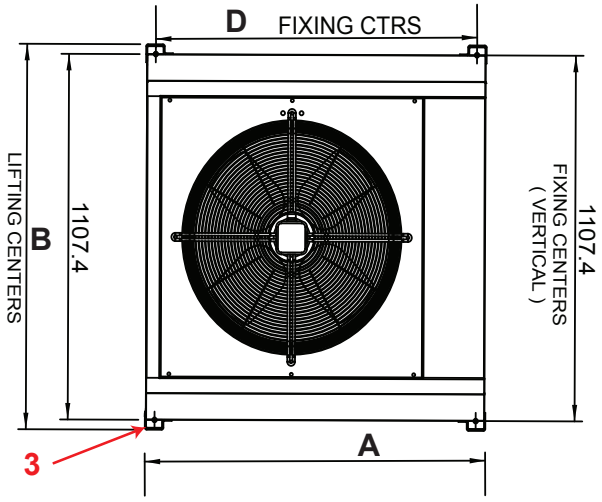

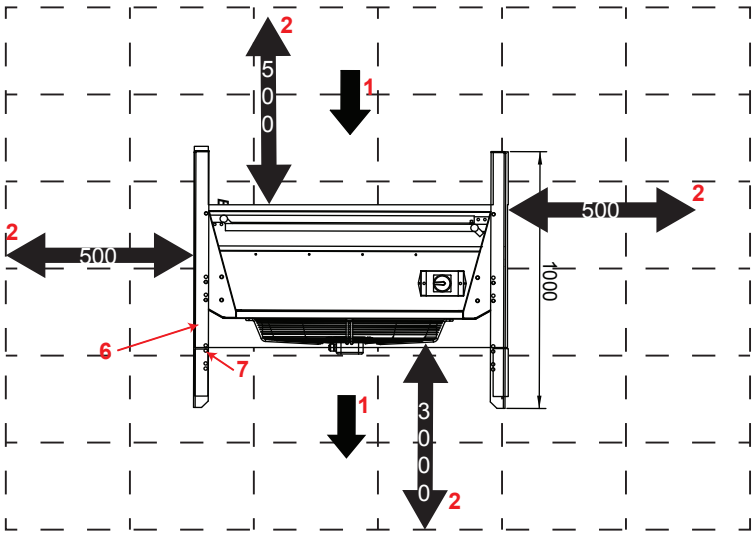

Diagram illustrated in mm

(1) Airflow
(2) Minimum clearances
(3) 12.7mm fixing hole
(4) Mains electric isolator
(5a) Inlet water connections
(5b) Outlet water connections
(6) Top brackets may be used to secure unit of similar size on top, using, 2 x 12.7mm fixing holes
(7) 40mm lifting holes

	DIMENSIONS (mm)					WEIGHTS (kg)		
	Standard Fan					Standard AC Fan	Optional EC Fan	Optional SCAF
	A	B	C	D	E			
DR10	1102	1167	1000	1040	700	77	83	88
DR12	1102	1167	1000	1040	700	93	105	90
DR15	1102	1167	1000	1040	700	90	96	101
DR20	1102	1167	1000	1040	700	106	118	103

Vertical case size 1 and 2 (1 fan)

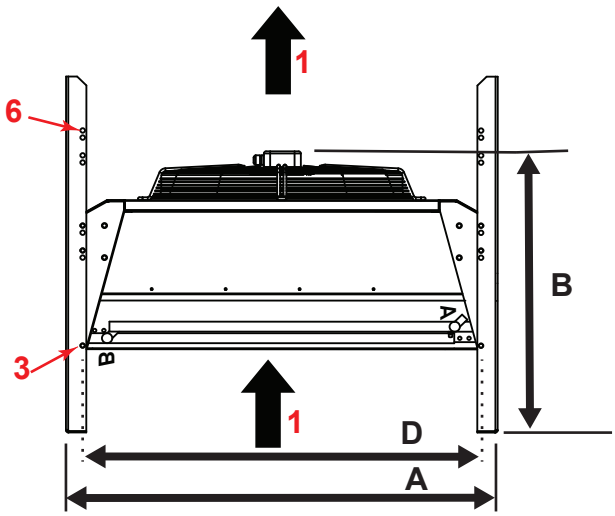

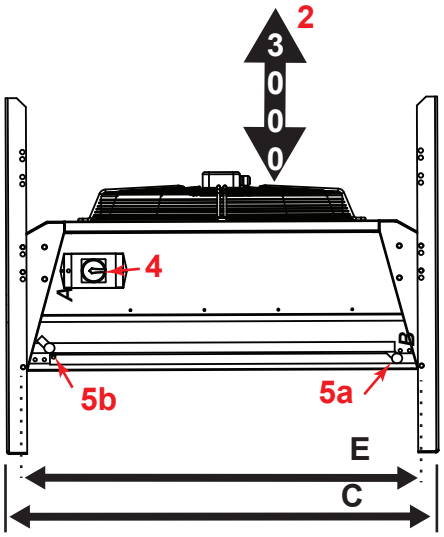

Diagram illustrated in mm

(1) Airflow
(2) Minimum clearances
(3) 12.7mm fixing hole
(4) Mains electric isolator
(5a) Outlet water connections
(5b) Inlet water connections
(6) 40mm lifting holes

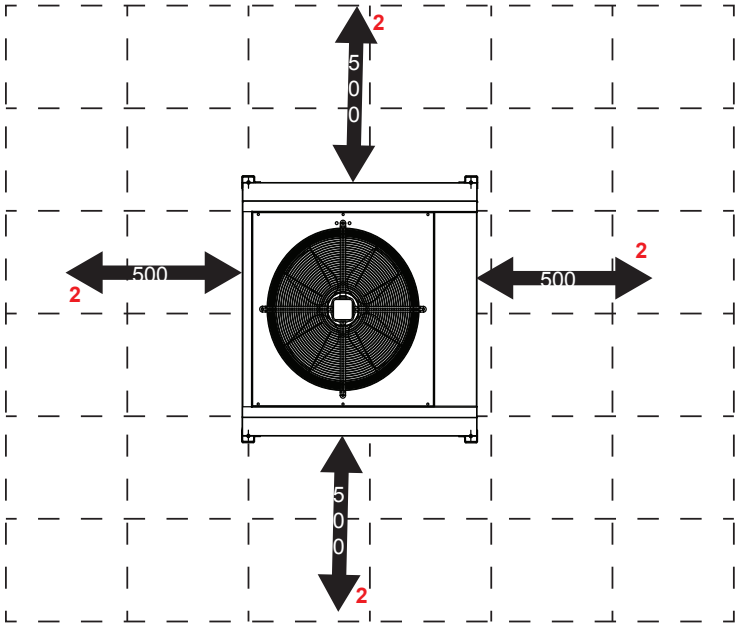

	DIMENSIONS (mm)							WEIGHTS (kg)		
	Standard Fan					Fan Options		Standard AC Fan	Optional EC Fan	Optional SCAF
						SCAF	EC			
	A	B	C	D	E	B	B			
DR10	1102	1090	1167	1042	1107	1130	1127	77	83	88
DR12	1102	1155	1167	1042	1107	1140	1170	93	105	90
DR15	1102	1090	1167	1042	1107	1130	1127	90	96	101
DR20	1102	1155	1167	1042	1107	1140	1170	106	118	103

Horizontal case size 3 (2 Fans)

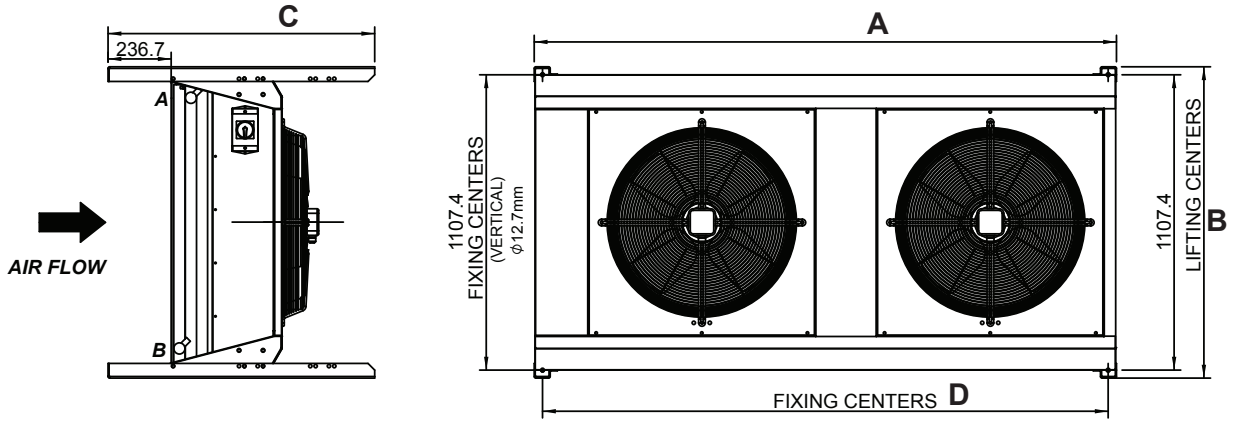

	DIMENSIONS (mm)					WEIGHTS (kg)		
	Standard Fan					Standard AC Fan	Optional EC Fan	Optional SCAF
	A	B	C	D	E			
DR25	2184	1167	1000	2121	700	132	145	154
DR30	2184	1167	1000	2121	700	165	188	159
DR35	2184	1167	1000	2121	700	162	175	184
DR45	2184	1167	1000	2121	700	195	218	189

Vertical case size 3 (2 Fans)

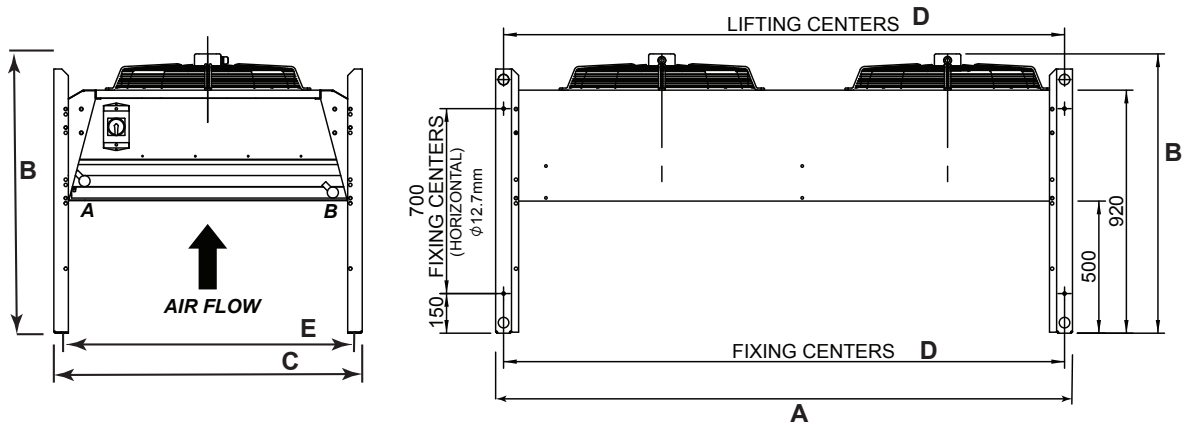

	DIMENSIONS (mm)							WEIGHTS (kg)		
	Standard Fan					Fan Options		Standard AC Fan	Optional EC Fan	Optional SCAF
						SCAF	EC			
	A	B	C	D	E	B	B			
DR25	2184	1090	1167	2124	1107	1130	1127	132	145	154
DR30	2184	1155	1167	2124	1107	1140	1170	165	188	159
DR35	2184	1090	1167	2124	1107	1130	1127	162	175	184
DR45	2184	1155	1167	2124	1107	1140	1170	195	218	189

Horizontal case size 4 (3 Fans)

Optional Short Case Axial Fan (SCAF)

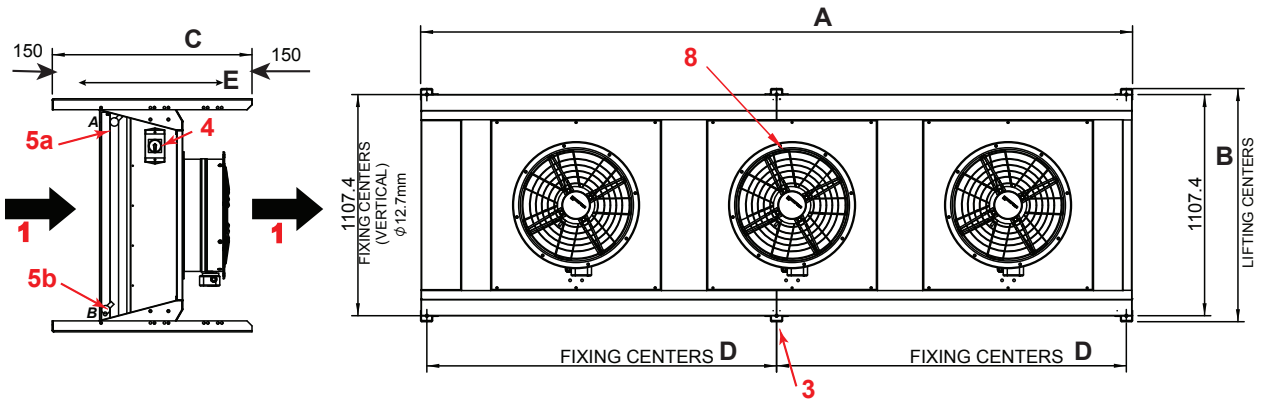

Diagram illustrated in mm

(1) Airflow
(2) Minimum clearances
(3) 12.7mm fixing hole
(4) Mains electric isolator
(5a) Inlet water connections
(5b) Outlet water connections
(6) Top brackets may be used to secure unit of similar size on top, using, 2 x 12.7mm fixing holes
(7) 40mm lifting holes
(8) Optional Short Case Axial Fan with integral duct fixing holes

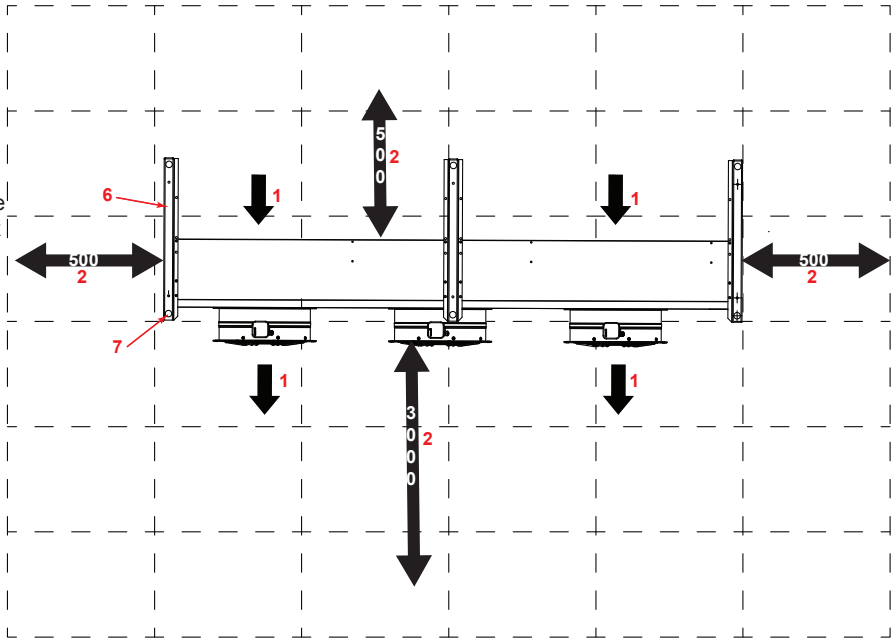

	DIMENSIONS (mm)					WEIGHTS (kg)		
	Standard Fan					Standard AC Fan	Optional EC Fan	Optional SCAF
	A	B	C	D	E			
DR40	3565	1167	1000	1752	700	208	228	242
DR50	3565	1167	1000	1752	700	258	293	249
DR55	3565	1167	1000	1752	700	260	280	294
DR75	3565	1140	1167	1752	1107	310	345	301

The SCAF fans in the horizontal mode do not obtrude past the mounting feet.

Vertical case size 4 (3 fans)
Optional Short Case Axial Fan (SCAF)

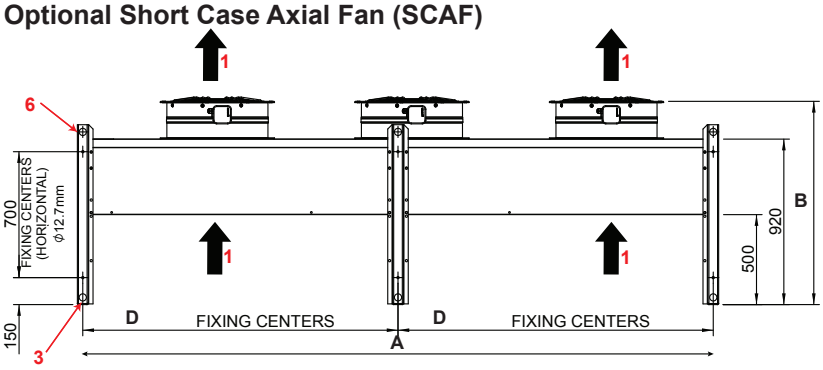

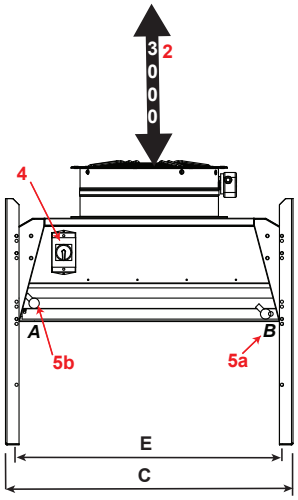

Diagram illustrated in mm

(1) Airflow
(2) Minimum clearances
(3) 12.7mm fixing hole
(4) Mains electric isolator
(5a) Outlet water connections
(5b) Inlet water connections
(6) 40mm lifting holes
(7) Optional short case axial fan with integral duct fixing holes

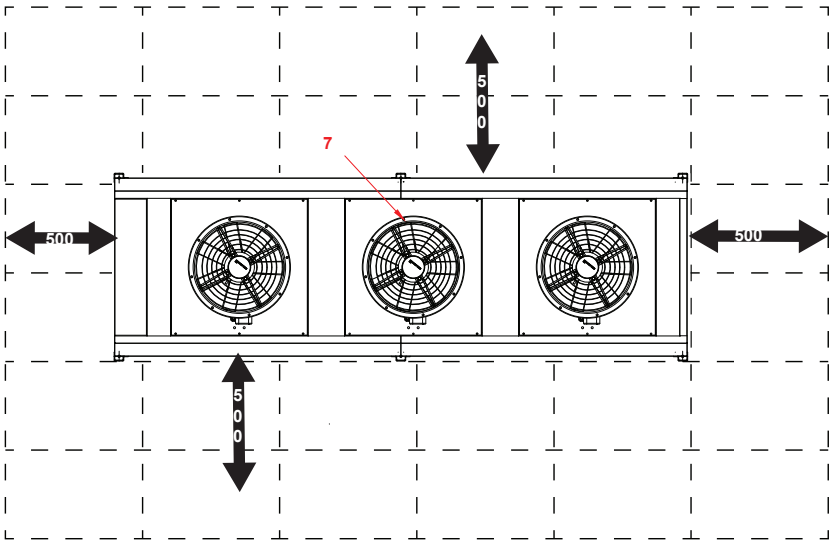

	DIMENSIONS (mm)							WEIGHTS (kg)		
	Standard Fan					Fan Options		Standard AC Fan	Optional EC Fan	Optional SCAF
						SCAF	EC			
	A	B	C	D	E	B	B			
DR40	3565	1090	1167	1753	1107	1130	1127	208	228	242
DR50	3565	1155	1167	1753	1107	1140	1170	258	293	249
DR60	3565	1090	1167	1753	1107	1130	1127	260	280	294
DR75	3565	1155	1167	1753	1107	1140	1170	310	345	301

Horizontal case size 5 (4 fans)

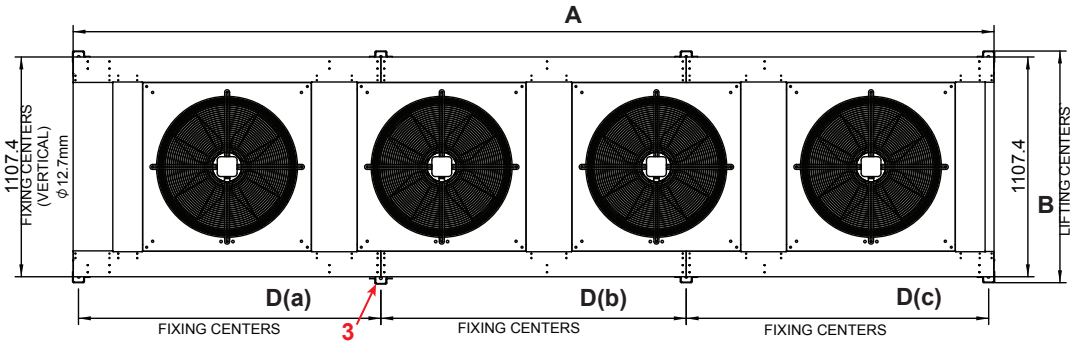

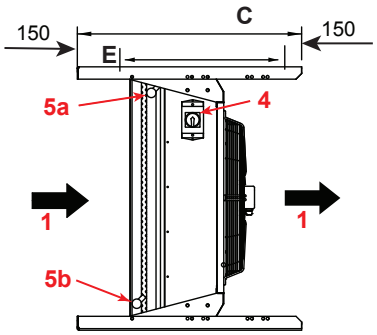

For Minimum Clearances (2) - see previous outdoor units in horizontal configuration

Diagram illustrated in mm

(1) Airflow
(2) Minimum clearances
(3) 12.7mm fixing hole
(4) Mains electric isolator
(5a) Inlet water connections
(5b) Outlet water connections
(5) Top brackets may be used to secure unit of similar size on top, using, 2 x 12.7mm fixing holes
(6) 40mm lifting holes

	DIMENSIONS (mm)							WEIGHTS (kg)		
	Standard Fan							Standard AC Fan	Optional EC Fan	Optional SCAF
	A	B	C	D(a)	D(b)	D(c)	E			
DR70	4641	1167	1000	1524	1539	1524	700	349	375	394
DR95	4641	1167	1000	1524	1539	1524	700	415	462	404

CAUTION A vertical air discharge unit is recommended for installation in windy locations or wherever a horizontal airflow would be obstructed.

Vertical case size 5 (4 fans)

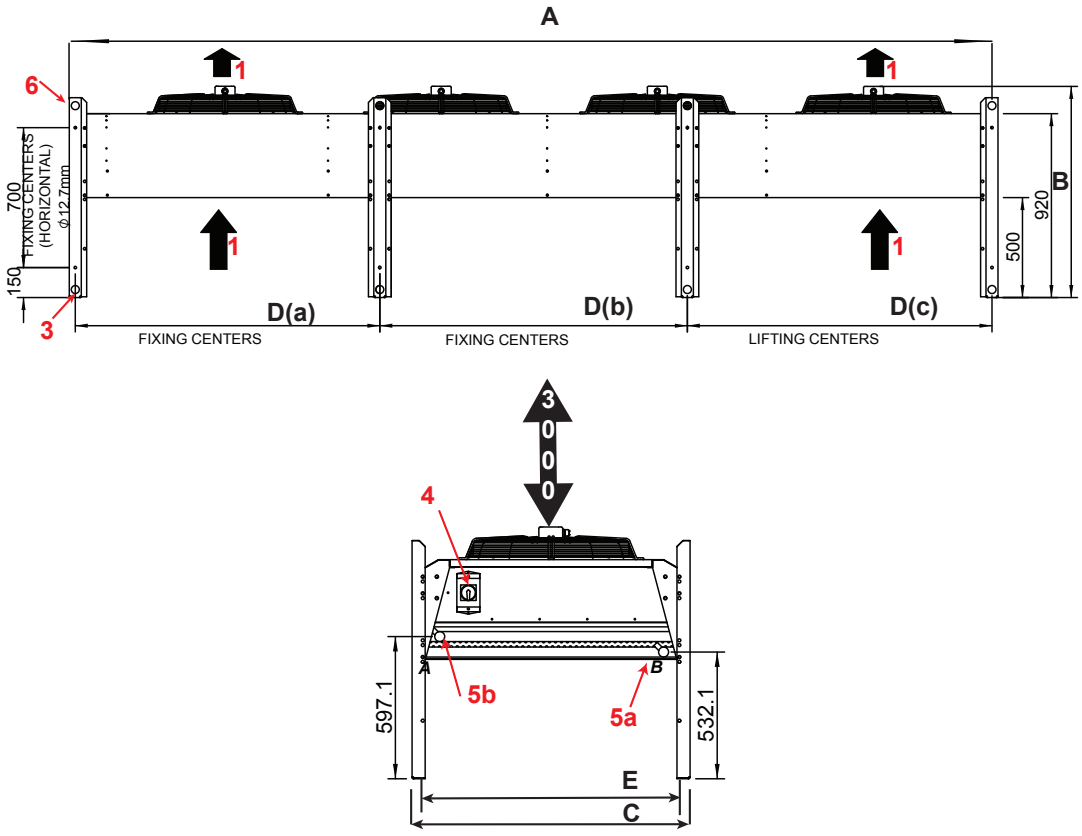

For minimum clearances (2) - see previous outdoor units in vertical configuration

Diagram illustrated in mm

(1) Air flow
(2) Minimum clearances
(3) 12.7mm fixing hole
(4) Mains electric isolator
(5) 40mm lifting holes
(6) Optional short case axial fan with integral duct fixing holes

	DIMENSIONS (mm)									WEIGHTS (kg)		
	Standard Fan							Fan Options		Standard AC Fan	Optional EC Fan	Optional SCAF
								SCAF	EC			
	A	B	C	D(a)	D(b)	D(c)	E	B	B			
DR70	4641	1090	1167	1524	1539	1524	1107	1130	1127	349	375	394
DR95	4641	1155	1167	1524	1539	1524	1107	1140	1170	415	462	404

Unit Lifting

General

- Employ lifting specialists
- Local codes and regulations relating to the lifting of this type of equipment should be observed
- Each chain/sling must be capable of lifting the whole unit
- Lift the unit slowly and evenly

IMPORTANT
Only use lifting points provided. Do not use 1 chain between 2 lifting points to avoid load shift. Ensure that chains/slings DO NOT crush the casework, coil or fan assemblies. If the unit is dropped it should immediately be checked for damage and reported to Airedale. Airedale will accept no responsibility for mishandling during the positioning of the equipment.

CAUTION
Check the unit is as ordered, discrepancies or transit damage should be reported to Airedale immediately.

Horizontal Air Discharge

The unit is delivered in horizontal air discharge configuration secured to a pallet. Where possible the unit should be moved with the pallet in place.

Use 4 lifting eyes attached to 4 individual slings/chains (supplied by others) and attach 2 to each top leg using the holes provided as illustrated.

Vertical Air Discharge

The unit is delivered in horizontal air discharge configuration (with the mains isolator and fan speed controller already configured for vertical air discharge) secured to a pallet. Where possible the unit should be moved with the pallet in place.

Before lifting into final position, the unit legs should be re-orientated, refer to instructions provided at delivery.

CAUTION
Care should be taken to ensure the unit does not sustain damage before it is lifted into final position.

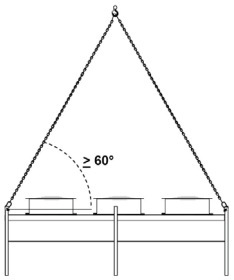

Use 4 lifting eyes attached to 4 individual slings/chains (supplied by others) and attach 1 to the top of each of the 4 corner legs using the holes provided as illustrated.

Operating Limits

Standard Variable Speed Head Pressure Control	
Minimum Ambient Air DB °C	-20°C
Maximum Ambient Air DB °C	+48

Optional On/Off Head Pressure Control	
Minimum Ambient Air DB °C	-0°C
Maximum Ambient Air DB °C	+48

(1) For conditions outside those quoted, please contact Airedale.

Performance Data – Dry Coolers

Standard Dry Cooler Fan

Water Entering / Leaving		Ambient				
Temperature °C		25°C	30°C	35°C	40°C	45°C
		Output (kW)	Output (kW)	Output (kW)	Output (kW)	Output (kW)
DR10	35°C/30°C	11	-	-	-	-
	40°C/35°C	19.6	11	-	-	-
	45°C/40°C	28.1	19.6	11.1	-	-
	50°C/45°C	36.6	28	19.6	11.1	-
	55°C/50°C	45	36.4	27.9	19.5	11.1
DR12	35°C/30°C	13.6	-	-	-	-
	40°C/35°C	24.5	13.7	-	-	-
	45°C/40°C	35.2	24.5	13.7	-	-
	50°C/45°C	45.9	35.1	24.5	13.8	-
	55°C/50°C	56.6	45.7	35.05	4.4	13.8
DR15	35°C/30°C	15..4	-	-	-	-
	40°C/35°C	25.6	15.3	-	-	-
	45°C/40°C	35.6	25.4	15.3	-	-
	50°C/45°C	45.4	35.2	25.2	15.2	-
	55°C/50°C	55.2	44.9	34.9	25	15.1
DR20	35°C/30°C	18.3	-	-	-	-
	40°C/35°C	31.9	18.3	-	-	-
	45°C/40°C	45.1	31.7	18.3	-	-
	50°C/45°C	58.1	44.8	31.6	18.3	-
	55°C/50°C	71.5	57.7	44.4	31.4	18.3
DR25	35°C/30°C	24.4	-	-	-	-
	40°C/35°C	43.1	24.5	-	-	-
	45°C/40°C	61.5	43	24.5	-	-
	50°C/45°C	79.7	61.2	42.9	24.5	-
	55°C/50°C	98	79.3	60.9	42.8	24.6
DR30	35°C/30°C	30.6	-	-	-	-
	40°C/35°C	54.5	30.7	-	-	-
	45°C/40°C	78	54.5	30.8	-	-
	50°C/45°C	101.4	77.8	54.4	30.9	-
	55°C/50°C	124.9	101	77.5	54.3	30.9
DR35	35°C/30°C	34.8	-	-	-	-
	40°C/35°C	57.4	34.6	-	-	-
	45°C/40°C	79.5	56.9	34.3	-	-
	50°C/45°C	101.4	78.7	56.4	34.1	-
	55°C/50°C	123.3	100.4	77.9	55.9	33.9
DR40	35°C/30°C	42	-	-	-	-
	40°C/35°C	72	41.9	-	-	-
	45°C/40°C	101.5	71.7	41.8	-	-
	50°C/45°C	130.8	101	71.4	41.8	-
	55°C/50°C	160.2	130	100.3	71	41.6

Water Entering / Leaving		Ambient				
Temperature °C		25°C	30°C	35°C	40°C	45°C
		Output (kW)	Output (kW)	Output (kW)	Output (kW)	Output (kW)
DR45	35°C/30°C	44.6	-	-	-	-
	40°C/35°C	74.4	44.4	-	-	-
	45°C/40°C	103.4	73.8	44.2	-	-
	50°C/45°C	132.3	102.5	73.2	43.9	-
	55°C/50°C	161.2	131.1	101.6	72.6	43.6
DR50	35°C/30°C	53.1	-	-	-	-
	40°C/35°C	91.7	53.1	-	-	-
	45°C/40°C	129.7	91.4	53	-	-
	50°C/45°C	167.6	129.2	91.1	53	-
	55°C/50°C	205.5	166.8	128.6	90.8	52.9

(1) Output kW refers to the dry cooler heat rejection

Water Entering / Leaving		Ambient				
Temperature °C		25°C	30°C	35°C	40°C	45°C
		Output (kW)	Output (kW)	Output (kW)	Output (kW)	Output (kW)
DR55	35°C/30°C	55	-	-	-	-
	40°C/35°C	91.2	54.8	-	-	-
	45°C/40°C	126.3	90.4	54.4	-	-
	50°C/45°C	161.2	125.1	89.6	54	-
	55°C/50°C	196	159.5	123.8	88.7	53.7
DR70	35°C/30°C	74.7	-	-	-	-
	40°C/35°C	122.6	74.2	-	-	-
	45°C/40°C	169.4	121.5	73.7	-	-
	50°C/45°C	215.8	167.6	120.3	73.1	-
	55°C/50°C	262.1	213.4	165.8	119.2	72.6
DR75	35°C/30°C	72.6	-	-	-	-
	40°C/35°C	121.5	72.3	-	-	-
	45°C/40°C	169.2	120.6	72	-	-
	50°C/45°C	216.6	167.7	119.6	71.6	-
	55°C/50°C	263.8	214.5	166.2	118.7	71.2
DR95	35°C/30°C	98.5	-	-	-	-
	40°C/35°C	163.3	97.9	-	-	-
	45°C/40°C	226.7	162	97.4	-	-
	50°C/45°C	289.7	224.6	160.6	96.7	-
	55°C/50°C	352.6	286.9	222.5	159.3	96.1

(1) Output kW refers to the dry cooler heat rejection

Sound Data

Method of Sound Measurement

All sound data quoted has been measured in the third-octave band limited values, using a Real Time Analyser calibrated sound intensity meter in accordance with BS EN ISO9614 Part 1: 2009

All Sound Power Levels quoted are calculated from measured sound intensity according BS EN ISO9614 Part 1: 2009

Semi Hemispherical

Sound Pressure Levels are calculated from sound power using the semi-hemispherical method where the noise source is in junction with 2 boundaries i.e. the floor and 1 wall.

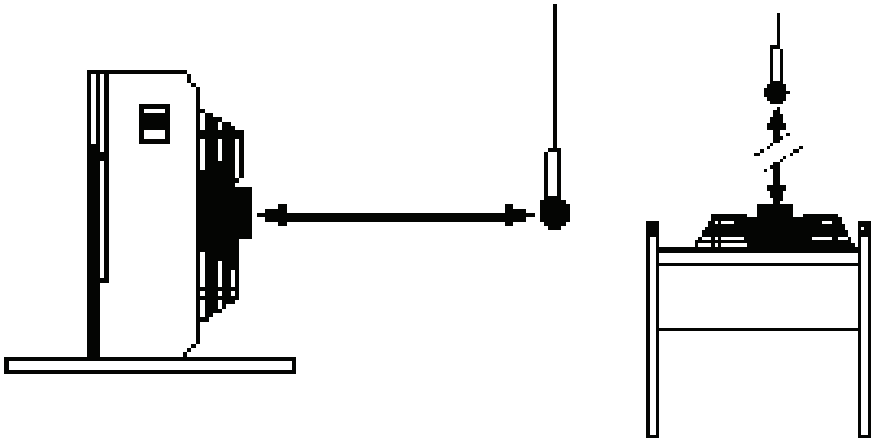

IMPORTANT

The sound data quoted is based on the unit having the STANDARD FAN running at FULL SPEED under normal operating conditions.
For sound data of optional fan selections, please contact Airedale.

Horizontal

	Sound		Overall	Frequency (Hz) dB							
	Measurement		dB(A)	63	125	250	500	1000	2000	4000	8000
DR10	Power		74	72	83	76	68	68	65	60	50
	Pressure	@10m	46	44	55	48	40	40	37	32	22
DR12	Power		74	72	83	76	68	68	65	60	50
	Pressure	@10m	46	44	55	48	40	40	37	32	22
DR15	Power		78	82	87	74	74	73	70	63	62
	Pressure	@10m	50	54	59	46	46	45	42	35	34
DR20	Power		82	83	80	82	79	78	74	67	59
	Pressure	@10m	54	55	52	54	51	50	46	39	31
DR25	Power		78	82	87	74	74	73	70	63	62
	Pressure	@10m	50	54	59	46	46	45	42	35	34
DR30	Power		82	83	80	82	79	78	74	67	59
	Pressure	@10m	54	55	52	54	51	50	46	39	31
DR35	Power		81	85	90	77	77	76	73	66	65
	Pressure	@10m	53	57	62	49	49	48	45	38	37
DR45	Power		85	86	83	85	82	81	77	70	62
	Pressure	@10m	57	58	55	57	54	53	49	42	34
DR40	Power		81	85	90	77	77	76	73	66	65
	Pressure	@10m	53	57	62	49	49	48	45	38	37
DR50	Power		85	86	83	85	82	81	77	70	62
	Pressure	@10m	57	58	55	57	54	53	49	42	34
DR55	Power		83	80	90	80	77	79	75	68	67
	Pressure	@10m	55	52	62	52	49	51	47	40	39
DR70	Power		87	88	85	87	84	83	79	72	64
	Pressure	@10m	59	60	57	59	56	55	51	44	36
DR75	Power		82	80	90	80	77	79	75	68	67
	Pressure	@10m	55	52	62	52	49	51	47	40	39
DR95	Power		87	88	85	87	84	83	79	72	64
	Pressure	@10m	59	60	57	59	56	55	51	44	36

Vertical

	Sound		Overall	Frequency (Hz) dB							
	Measurement		dB(A)	63	125	250	500	1000	2000	4000	8000
DR10	Power		75	69	86	75	68	69	65	61	51
	Pressure	@ 10m	47	41	58	47	40	41	37	33	23
DR12	Power		75	69	86	75	68	69	65	61	51
	Pressure	@ 10m	47	41	58	47	40	41	37	33	23
DR15	Power		79	80	90	73	74	74	70	64	63
	Pressure	@ 10m	51	52	62	45	46	46	42	36	35
DR20	Power		83	80	83	82	79	79	73	68	60
	Pressure	@ 10m	55	52	55	54	51	51	45	40	32
DR25	Power		79	80	90	73	74	74	70	64	63
	Pressure	@ 10m	51	52	62	45	46	46	42	36	35
DR30	Power		83	80	83	82	79	79	73	68	60
	Pressure	@ 10m	55	52	55	54	51	51	45	40	32
DR35	Power		82	83	93	76	77	77	73	67	66
	Pressure	@ 10m	54	55	65	48	49	49	45	39	38
DR45	Power		86	83	86	85	82	82	76	71	63
	Pressure	@ 10m	58	55	58	57	54	54	48	43	35
DR40	Power		82	83	93	76	77	77	73	67	66
	Pressure	@ 10m	54	55	65	48	49	49	45	39	38
DR50	Power		86	83	86	85	82	82	76	71	63
	Pressure	@ 10m	58	55	58	57	54	54	48	43	35
DR55	Power		84	78	93	79	78	80	75	69	68
	Pressure	@ 10m	56	50	65	51	50	52	47	41	40
DR70	Power		88	85	88	87	84	84	78	73	65
	Pressure	@ 10m	60	57	60	59	56	56	50	45	37
DR75	Power		84	78	93	79	78	80	75	69	68
	Pressure	@ 10m	56	50	65	51	50	52	47	41	40
DR95	Power		88	85	88	87	84	84	78	73	65
	Pressure	@ 10m	60	57	60	59	56	56	50	45	37

Mechanical Data

		DR10	DR12	DR15
Total Heat of Rejection DR (1)	kW	11.1	13.7	15.3
Dimensions - Horizontal (2)				
H x W x L	mm	1167 x 1000 x 1102	1167 x 1000 x 1102	1167 x 1000 x 1102
Dimensions – Vertical (2)				
H x W x L	mm	1090 x 1167 x 1102	1155 x 1000 x 1102	1090 x 1167 x 1102
Weight				
Machine	kg	77	93	90
Construction				
Material/Colour		Galvanised Sheet Steel, Epoxy Baked Powder Paint - Light Grey (RAL 7035)		
Dry Cooler		Air Cooled - Copper Tube/Turbulated Aluminium Fins		
Total Face Area	m²	0.91	0.91	0.91
Nominal Airflow	m³/s	2.3	3.3	1.9
Discharge		**-H** Horizontal or **-V** Vertical (***Please Specify at Order***)		
Fan & Motor		Axial		
Quantity		1	1	1
Diameter	mm	630	710	630
Maximum Speed	rpm	895	930	895
Dry Cooler				
Internal Water Volume	L	6.6	6.6	11.9
Nominal Flowrate	l/s	0.53	0.65	0.7
Pressure Drop	kPa	11.9	17.8	20.7
OPTIONAL EXTRAS				
Short Case Axial Fan		Designed to 75 Pa ESP		
Dimensions - Horizontal				
H x W x L	mm	1167 x 1000 x 1102	1167 x 1000 x 1102	1167 x 1000 x 1102
Dimensions - Vertical				
H x W x L	mm	1130 x 1167 x 1102	1140 x 1167 x 1102	1130 x 1167 x 1102
Weight				
Machine	kg	101.2	105	114.2
EC Fan				
Dimensions - Horizontal				
H x W x L	mm	1167 x 1000 x 1102	1167 x 1000 x 1102	1167 x 1000 x 1102
Dimensions - Vertical				
H x W x L	mm	1127 x 1167 x 1102	1170 x 1167 x 1102	1127 x 1167 x 1102
Weight				
Machine	kg	83	90	96

(1)Nominal data based on 35°C ambient and 45/40°C Water entering / leaving. All performance data is supplied in accordance with BS EN 14511-1:2013

(2) Overall dimensions for clearance

Mechanical Data

		DR20	DR25	DR30	DR35	DR45
Total Heat of Rejection DR (1)	kW	18.34	24.5	30.8	34.3	44.2
Dimensions - Horizontal (2)						
H x W x L	mm	1167 x 1000 x 1102	1167 x 1000 x 2184	1167 x 1000 x2184	1167 x 1000 x 2184	1167 x 1000 x 2184
Dimensions - Vertical (2)						
H x W x L	mm	1155 x 1167 x 1102	1090 x 1167 x 2184	1155 x 1167 x 2184	1090 x 1167 x 2184	1155 x 1167 x 2184
Weight						
Machine	kg	106	132	165	162	195
Construction						
Material/Colour		Galvanised Sheet Steel, Epoxy Baked Powder Paint - Light Grey (RAL 7035)				
Dry Cooler		Air Cooled - Copper Tube/Turbulated Aluminium Fins				
Total Face Area	m²	0.91	2.11	2.11	2.11	2.11
Nominal Airflow	m³/s	2.6	4.8	7	4.2	5.7
Discharge		**-H** Horizontal or **-V** Vertical (***Please Specify at Order***)				
Fan & Motor		Axial				
Quantity		1	2	2	2	2
Diameter	mm	710	630	710	630	710
Maximum Speed	rpm	930	895	930	895	930
Dry Cooler						
Internal Water Volume	L	11.9	14.8	14.8	26.7	26.7
Nominal Flowrate	l/s	0.9	1.2	1.47	1.64	2.1
Pressure Drop	kPa	46.4	15.3	20.5	38.5	60.4
OPTIONAL EXTRAS						
Short Case Axial Fan		Designed to 75 Pa ESP				
Dimensions – Horizontal						
H x W x L	mm	1167 x 1000 x 1102	1167 x 1000 x 2184	1167 x 1000 x 2184	1167 x 1000 x 2184	1167 x 1000 x 2184
Dimensions – Vertical						
H x W x L	mm	1140 x 1167 x 1102	1130 x 1167 x 2184	1140 x 1167 x 2184	1130 x 1167 x 2184	1140 x 1167 x 2184
Weight						
Machine	kg	118	167.2	188	197.2	218
EC Fan						
Dimensions – Horizontal						
H x W x L	mm	1167 x 1000 x 1102	1167 x 1000 x 2184	1167 x 1000 x 2184	1167 x 1000 x 2184	1167 x 1000 x 2184
Dimensions – Vertical						
H x W x L	mm	1170 x 1167 x 1102	1127 x 1167 x 2184	1170 x 1167 x 2184	1127 x 1167 x 2184	1170 x 1167 x 2184
Weight						
Machine	kg	103	145	159	175	189

(1) Nominal data based on 35°C ambient and a 45/40°C Water entering / leaving. All performance data is supplied in accordance with BS EN 14511-1:2013

(2) Overall dimensions for clearance.

Mechanical Data

		DR40	DR50	DR55
Total Heat of Rejection DR (1)	kW	41.8	53	54.4
Dimensions - Horizontal (2)				
H x W x L	mm	1167 x 1000 x 3565	1167 x 1000 x 3565	1167 x 1000 x 3565
Dimensions - Vertical (2)				
H x W x L	mm	1090 x 1167 x 3565	1155 x 1167 x 3565	1090 x 1167 x 3565
Weight				
Machine	kg	208	258	260
Construction				
Material/Colour		Galvanised Sheet Steel, Epoxy Baked Powder Paint - Light Grey (RAL 7035)		
Dry Cooler		Air Cooled - Copper Tube/Turbulated Aluminium Fins		
Total Face Area	m²	3.63	3.63	3.63
Nominal Airflow	m³/s	7.5	10.8	6.6
Discharge		**-H** Horizontal or **-V** Vertical (***Please Specify at Order***)		
Fan & Motor		Axial		
Quantity		3	3	3
Diameter	mm	630	710	630
Maximum Speed	rpm	895	930	895
Dry Cooler				
Internal Water Volume	L	23.1	23.1	43.2
Water flowrate	l/s	2	2.5	2.6
Pressure Drop	kPa	48.5	70	32
OPTIONAL EXTRAS				
Short Case Axial Fan		Designed to 75 Pa ESP		
Dimensions - Horizontal				
H x W x L	mm	1167 x 1000 x 3565	1167 x 1000 x 3565	1167 x 1000 x 3565
Dimensions - Vertical				
H x W x L	mm	1130 x 1167 x 3565	1140 x 1167 x 3565	1130 x 1167 x 3565
Weight				
Machine	kg	255.2	249	307.2
EC Fan				
Dimensions - Horizontal				
H x W x L	mm	1167 x 1000 x 3565	1167 x 1000 x 3565	1167 x 1000 x 3565
Dimensions - Vertical				
H x W x L	mm	1127 x 1167 x 3565	1170 x 1167 x 3565	1127 x 1167 x 3565
Weight				
Machine	kg	228	293	280

(1) Nominal data based on 35°C ambient and a 45/40°C Water entering / leaving. All performance data is supplied in accordance with BS EN 14511-1:2013

(2) Overall dimensions for clearance; refer to ***Dimensional & Installation Data***, for detail.

Mechanical Data

		DR75	DR70	DR95
Total Heat of Rejection DR (1)	kW	72	73.7	97.4
Dimensions - Horizontal (2)				
H x W x L	mm	1167 x 1000 x 3565	1167 x 1000 x 4641	1167 x 1000 x 4641
Dimensions - Vertical (2)				
H x W x L	mm	1155 x 1167 x 3565	1090 x 1167 x 4641	1155 x 1167 x 4641
Weight				
Machine	kg	310	349	415
Construction				
Material/Colour		Galvanised Sheet Steel, Epoxy Baked Powder Paint - Light Grey (RAL 7035)		
Dry Cooler		Air Cooled - Copper Tube/Turbulated Aluminium Fins		
Total Face Area	m^2	3.63	4.8	4.8
Nominal Airflow	m^3/s	9.3	8.7	12.4
Discharge		**-H** Horizontal or **-V** Vertical (***Please Specify at Order***)		
Fan & Motor		Axial		
Quantity		3	4	4
Diameter	mm	710	630	710
Maximum Speed	rpm	930	895	930
Dry Cooler				
Internal Water Volume	L	43.2	55.9	55.9
Water flowrate	l/s	3.4	3.5	4.6
Pressure Drop	kPa	53	62	94
OPTIONAL EXTRAS				
Short Case Axial Fan		Designed to 75 Pa ESP		
Dimensions – Horizontal				
H x W x L	mm	1140 x 1000 x 3565	1167 x 1000 x 4641	1167 x 1000 x 4641
Dimensions – Vertical				
H x W x L	mm	1140 x 1167 x 3565	1130 x 1167 x 4641	1140 x 1167 x 4641
Weight				
Machine	kg	345	407.2	404
EC Fan				
Dimensions – Horizontal				
H x W x L	mm	1167 x 1000 x 3565	1167 x 1000 x 4641	1167 x 1000 x 4641
Dimensions – Vertical				
H x W x L	mm	1170 x 1167 x 3565	1127 x 1167 x 4641	1170 x 1167 x 4641
Weight				
Machine	kg	301	375	462

(1) Nominal data based on 35°C ambient and a 45/40°C Water entering/leaving. All performance data is supplied in accordance with BS EN 14511-1:2013

(2) Overall dimensions for clearance; refer to ***Dimensional & Installation Data***, for detail.

Waterside Pressure Drop

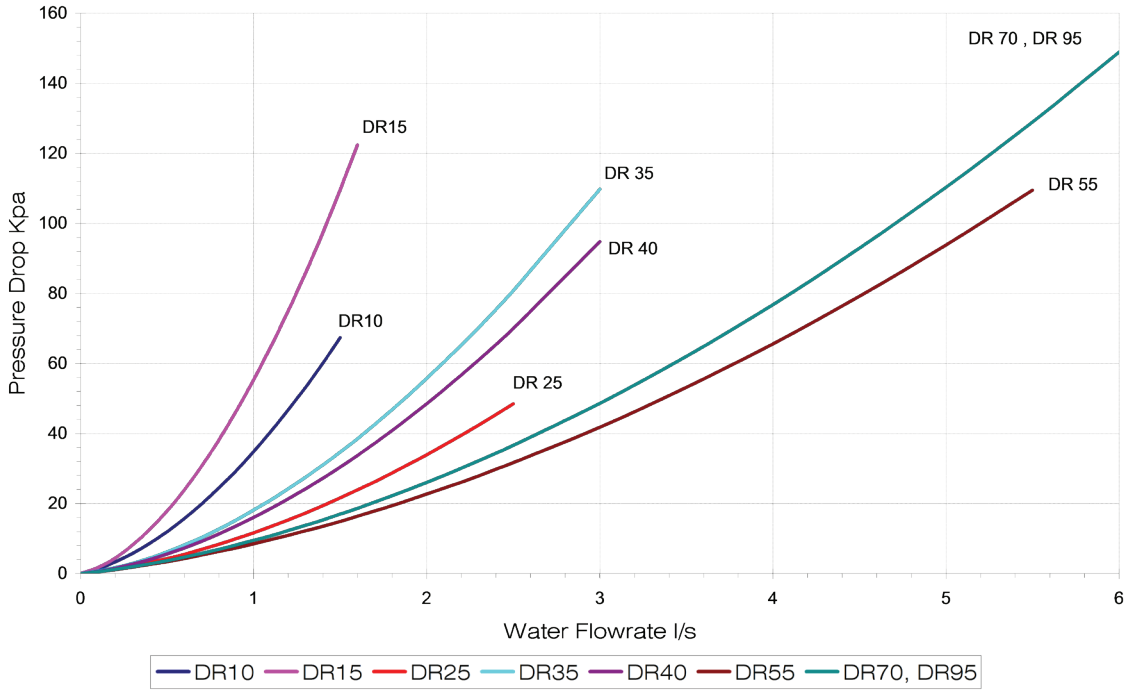

Electrical Data

Dry Cooler		DR10	DR12	DR15	DR20	DR25	DR30	DR35
Unit Data (1)								
Nominal Run Amps	A	2.6	1.7	2.6	1.7	5.2	3.3	5.2
Maximum Start Amps	A	9.2	6.1	9.2	6.1	18.3	12.2	18.3
Recommended Mains Fuse	A	6	6	6	6	10	6	10
Max Mains Cable Incoming	mm²	6	6	6	6	6	6	6
Mains Supply 50Hz		230V/1Ph	400V/3Ph	230V/1Ph	400V/3Ph	230V/1Ph	400V/3Ph	230V/1Ph
Fan - Per Fan								
Quantity		1	1	1	1	2	2	2
Motor Size	kW	0.6	0.88	0.6	0.88	0.6	0.88	0.6
Full Load Amps	A	2.6	1.7	2.6	1.7	2.6	1.7	2.6
Locked Rotor Amps	A	9.2	6.1	9.2	6.1	9.2	6.1	9.2
OPTIONAL EXTRAS								
Short Case Axial Fan - Per Fan								
Quantity		1	1	1	1	2	2	2
Motor Size	kW	1.15	1.94	1.15	1.94	1.15	1.94	1.15
Full Load Amps	A	8.6	3.4	8.6	3.4	8.6	3.4	8.6
Locked Rotor Amps	A	25.8	11.9	25.8	11.9	25.8	11.9	25.8
EC Dry cooler Fan - Per Fan								
Quantity		1	1	1	1	2	2	2
Motor Size	kW	0.73	1.68	0.73	1.68	0.73	1.68	0.73
Full Load Amps	A	3.3	2.6	3.3	2.6	3.3	2.6	3.3

(1) Nominal data based on 35°C ambient and a 50°C mean condensing temperature and using standard fan.

Interconnecting Wiring	**3 Phase Units**		**L1**	○	←	Mains Incoming 400V / 3Ph + N / 50Hz
			L2	○	←	
			L3	○	←	
			N	○	←	
			PE	○	←	

Interconnecting wiring	**Single Phase Units**		**L1**	○	←	Mains Incoming 230V / 1Ph + N / 50Hz
			N	○	←	
			PE	○	←	

Electrical Data

Dry Cooler		DR45	DR40	DR50	DR55	DR75	DR70	DR95
Unit Data (1)								
Nominal Run Amps	A	3.3	7.86	4.95	7.86	4.95	10.48	6.6
Maximum Start Amps	A	12.2	27.5	18.3	27.5	18.3	36.7	24.4
Recommended Mains Fuse	A	6	16	10	16	10	16	10
Max Mains Cable Incoming	mm²	6	6	6	6	6	6	6
Mains Supply 50Hz		400V/3Ph	230V/1Ph	400V/3Ph	230V/1Ph	400V/3Ph	230V/1Ph	400V/3Ph
Fan - Per Fan								
Quantity		2	3	3	3	3	4	4
Motor Size	kW	0.88	0.6	0.88	0.6	0.88	0.6	0.88
Full Load Amps	A	1.65	2.62	1.65	2.62	1.65	2.62	1.65
Locked Rotor Amps	A	6.1	9.17	6.1	9.17	6.1	9.17	6.1
OPTIONAL EXTRAS								
Short Case Axial Fan - Per Fan								
Quantity		2	3	3	3	3	4	4
Motor Size	kW	1.94	1.15	1.94	1.15	1.94	1.15	1.94
Full Load Amps	A	3.4	8.6	3.4	8.6	3.4	8.6	3.4
Locked Rotor Amps	A	11.9	25.8	11.9	25.8	11.9	25.8	11.9
EC Dry cooler Fan - Per Fan								
Quantity		2	3	3	3	3	4	4
Motor Size	kW	1.68	0.73	1.68	0.73	1.68	0.73	1.68
Full Load Amps	A	2.6	3.3	2.6	3.3	2.6	3.3	2.6

(1) Nominal data based on 35°C ambient and a 50°C mean condensing temperature and using standard fan.

Interconnecting Wiring	**3 Phase Units**		**L1**	○	←	Mains Incoming 400V / 3Ph + N / 50Hz
			L2	○	←	
			L3	○	←	
			N	○	←	
			PE	○	←	

Interconnecting wiring	**Single Phase Units**		**L1**	○	←	Mains Incoming 230V / 1Ph + N / 50Hz
			N	○	←	
			PE	○	←	

pLAN Termination

The plugged termination ensures that the connections are made simultaneously. Failure to attach the cables this way may cause damage to the controller.

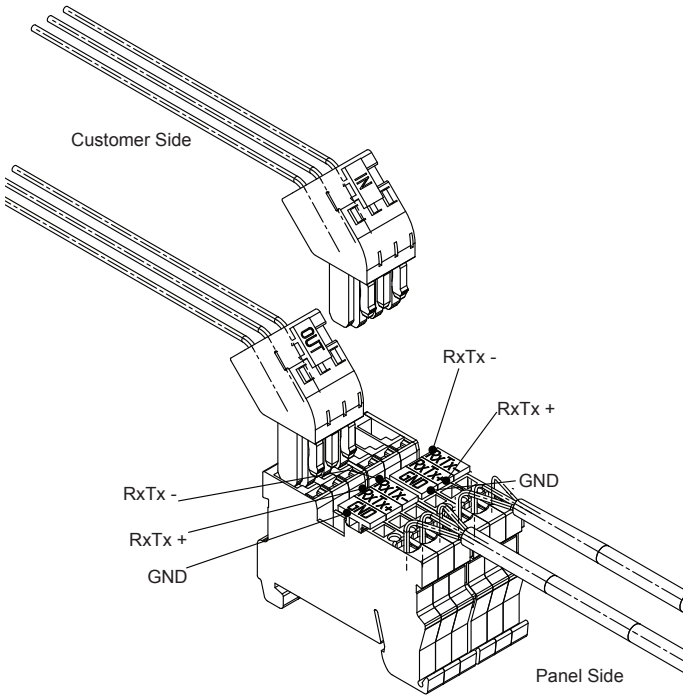

Notes

After Sales

Warranty

All Airedale products or parts (non consumable) supplied for installation within the UK mainland and commissioned by an Airedale engineer, carry a full Parts & Labour warranty for a period of 12 months from the date of commissioning or 18 months from the date of despatch, whichever is the sooner.
Parts or Equipment supplied by Airedale for installation within the UK or for Export that are properly commissioned in accordance with Airedale standards and specification, not commissioned by an Airedale engineer; carry a 12 month warranty on non consumable Parts only from the date of commissioning or 18 months from the date of despatch, whichever is the sooner.
Parts or equipment installed or commissioned not to acceptable Airedale standards or specification invalidate all warranty.

Warranty is only valid in the event that

In the period between delivery and commissioning the equipment:

- is properly protected & serviced as per the Airedale installation & maintenance manual provided
- where applicable the glycol content is maintained to the correct level.

In the event of a problem being reported and once warranty is confirmed* as valid under the given installation and operating conditions, the Company will provide the appropriate warranty coverage (as detailed above) attributable to the rectification of any affected Airedale equipment supplied (excluding costs for any specialist access or lifting equipment that must be ordered by the customer).

*Once warranty is confirmed, maintenance must be continued to validate the warranty period.

Any spare part supplied by Airedale under warranty shall be warranted for the unexpired period of the warranty or 3 months from delivery, whichever period is the longer.
To be read in conjunction with the Airedale Conditions of Sale - Warranty and Warranty Procedure, available upon request.

Procedure

When a component part fails, a replacement part should be obtained through our Spares department. If the part is considered to be under warranty, the following details are required to process this requirement. Full description of part required, including Airedale's part number, if known. The original equipment serial number. An appropriate purchase order number.
A spares order will be raised under our warranty system and the replacement part will be despatched, usually within 24 hours should they be in stock. When replaced, the faulty part must be returned to Airedale with a suitably completed and securely attached "Faulty Component Return" (FCR) tag. FCR tags are available from Airedale and supplied with each Warranty order.
On receipt of the faulty part, suitably tagged, Airedale will pass to its Warranty department, where it will be fully inspected and tested in order to identify the reason for failure, identifying at the same time whether warranty is justified or not.
On completion of the investigation of the returned part, a full "Report on Goods Returned" will be issued. On occasion the release of this complete report may be delayed as component manufacturers become involved in the investigation.
When warranty is allowed, a credit against the Warranty invoice will be raised. Should warranty be refused the Warranty invoice becomes payable on normal terms.

Exclusions

Warranty may be refused for the following reasons.

- Misapplication of product or component
- Incorrect site installation
- Incomplete commissioning documentation
- Inadequate site installation
- Inadequate site maintenance
- Damage caused by mishandling
- Replaced part being returned damaged without explanation
- Unnecessary delays incurred in return of defective component

Returns analysis

All faulty components returned under warranty are analysed on a monthly basis as a means of verifying component and product reliability as well as supplier performance. It is important that all component failures are reported correctly.

Head Office
Airedale International Air Conditioning Ltd
Leeds Road
Rawdon
Leeds LS19 6JY
Tel: +44 (0) 113 2391000
Fax:+44 (0) 113 2507219
E-mail enquiries@airedale.com
Web www.airedale.com

PART NO:	ISSUE
(TM E)	10/2012
1.1.0	02_2013
1.3.0	10/2014
1.4.0	07/2015
1.5.0	08/2015
1.6.0	10/2015
1.7.0	11/2015